GRAF®

Rainwater Harvesting

INSTALLATION MANUAL

The Platin tank Garden Comfort system

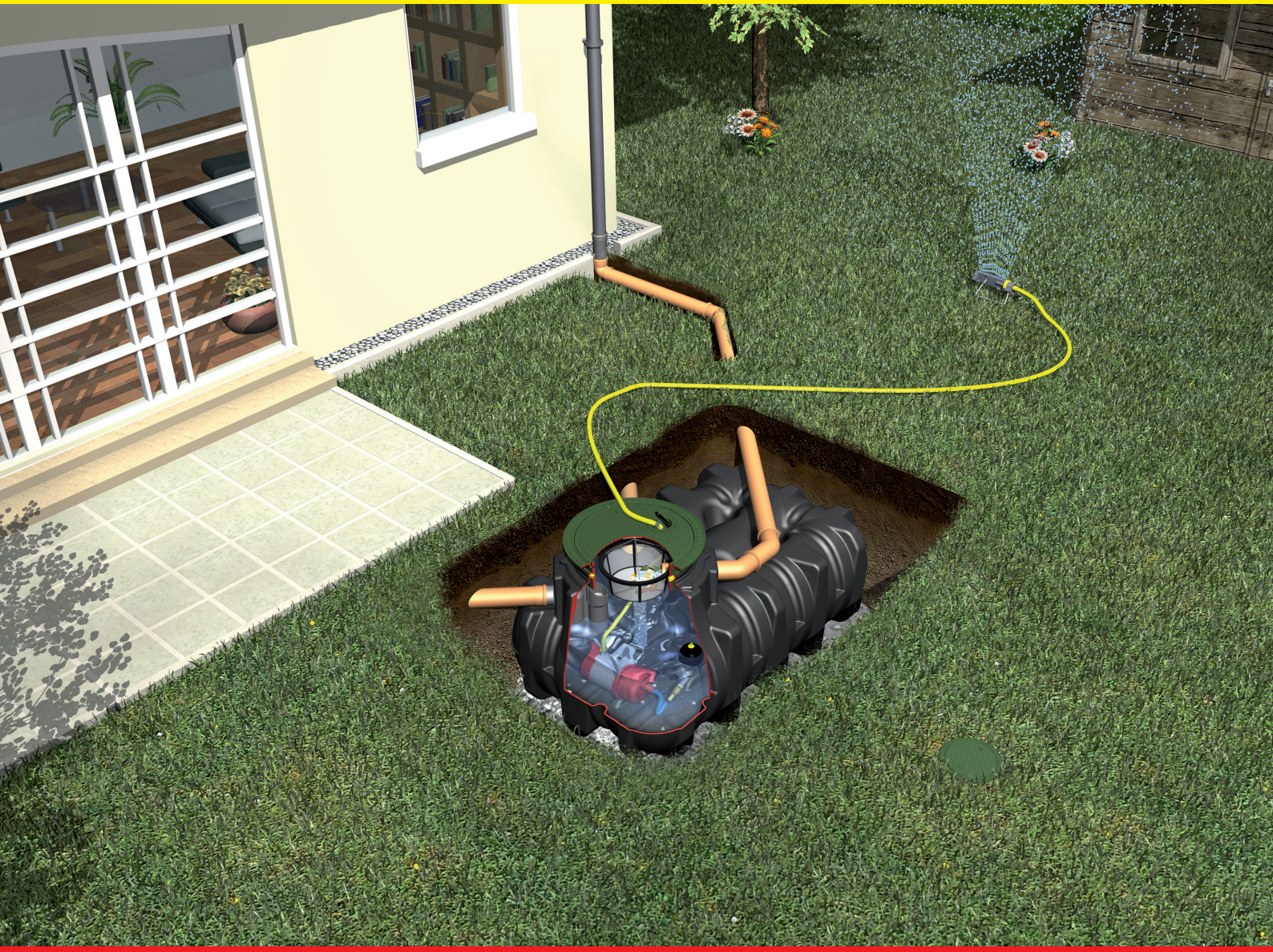

Document No. Graf-0004 Rev. 1

1 GENERAL NOTES

1.1 Safety

The relevant accident prevention regulations must be observed during all work.

The relevant regulations and standards must additionally be taken into consideration during installation, assembly, servicing, repair, etc.

The system or individual parts of the system must be installed by qualified specialists.

During all work on the system or parts of the system, the entire system must always be rendered inoperable and secured to prevent unauthorised reactivation.

Except in the event of work carried out in the tank, the cover of the tank must always be kept sealed, as this otherwise constitutes a maximum risk of accident. Only original GRAF covers or covers approved in writing by GRAF must be used.

GRAF offers an extensive range of accessories, all of which are designed to match each other and which can be extended to form complete systems. The use of accessories that have not been approved by GRAF results in the exclusion of the warranty/guarantee.

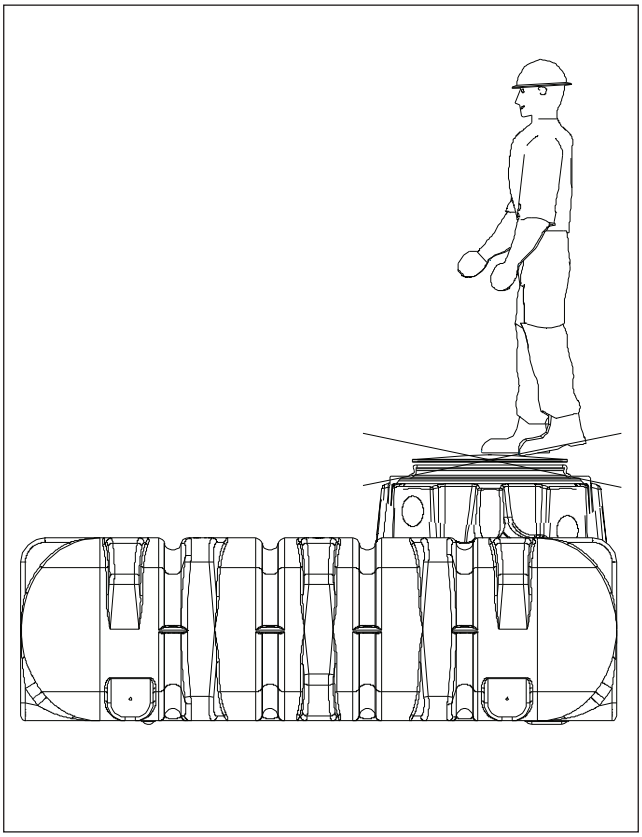

1.2 Identification obligation - Regulation

The water in these systems is not suitable for consumption or personal hygiene.

All pipe work and outlets of the water systems are to be labelled with the words **“Not drinking water”** either in words or graphically. British Standard BS EN 16941-1:2018) so that after years of use, an accidental connection to the drinking water system is prevented. Even when correctly labelled it may possibly be mistaken, for example by children. For this reason, all the outlets of the systems process water must be fitted with **child safe valves**.

2 TECHNICAL DATA

2.1 Technical Data Platin
(1500 L, 3000 L, 5000 L, 7500 L)

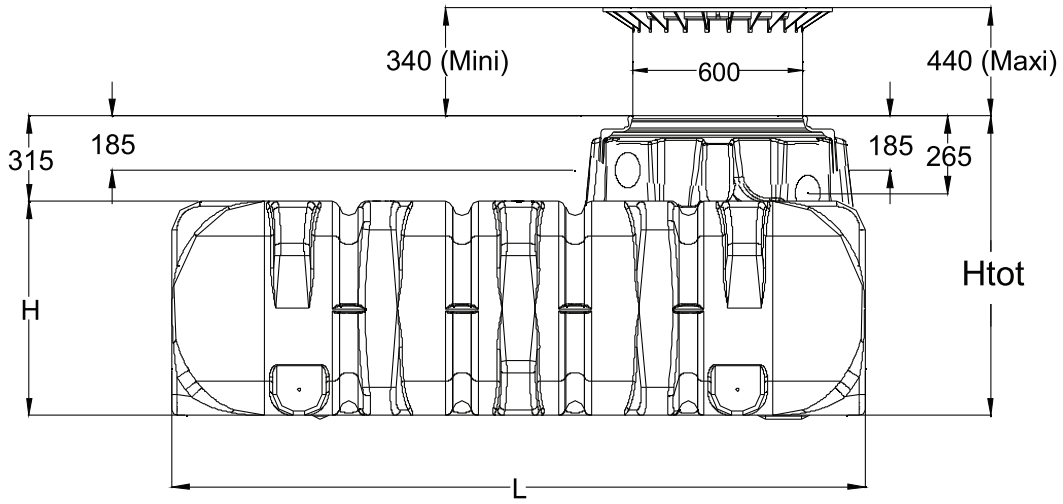

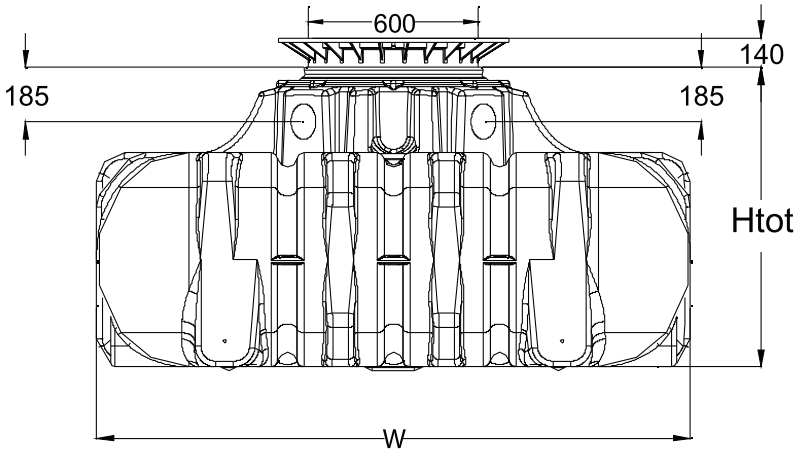

2.2 Overview tanks Platin
(1500 L, 3000 L, 5000 L, 7500 L)

Tank	1500 litres	3000 litres	5000 litres	7500 litres
Weight	82 kg	180 kg	250 kg	380 kg
L	2100 mm	2450 mm	2890 mm	3600 mm
W	1250 mm	2100 mm	2300 mm	2250 mm
H	700 mm	735 mm	1000 mm	1250 mm
Htot*	1015 mm	1050 mm	1315 mm	1565 mm

* Htot = total height (without telescopic dome shaft)

3 INSTALLATION & ASSEMBLY

1. Subsoil
2. Telescopic dome shaft
3. Compact foundation
4. Surrounding (round-grained gravel, maximum grain size 8/16)
5. Covering layer
6. Platin Rainwater Underground Tank
7. Concrete layer for surfaces used by passenger cars

ß –––› DIN 4124 from 1250mm depth of the trench

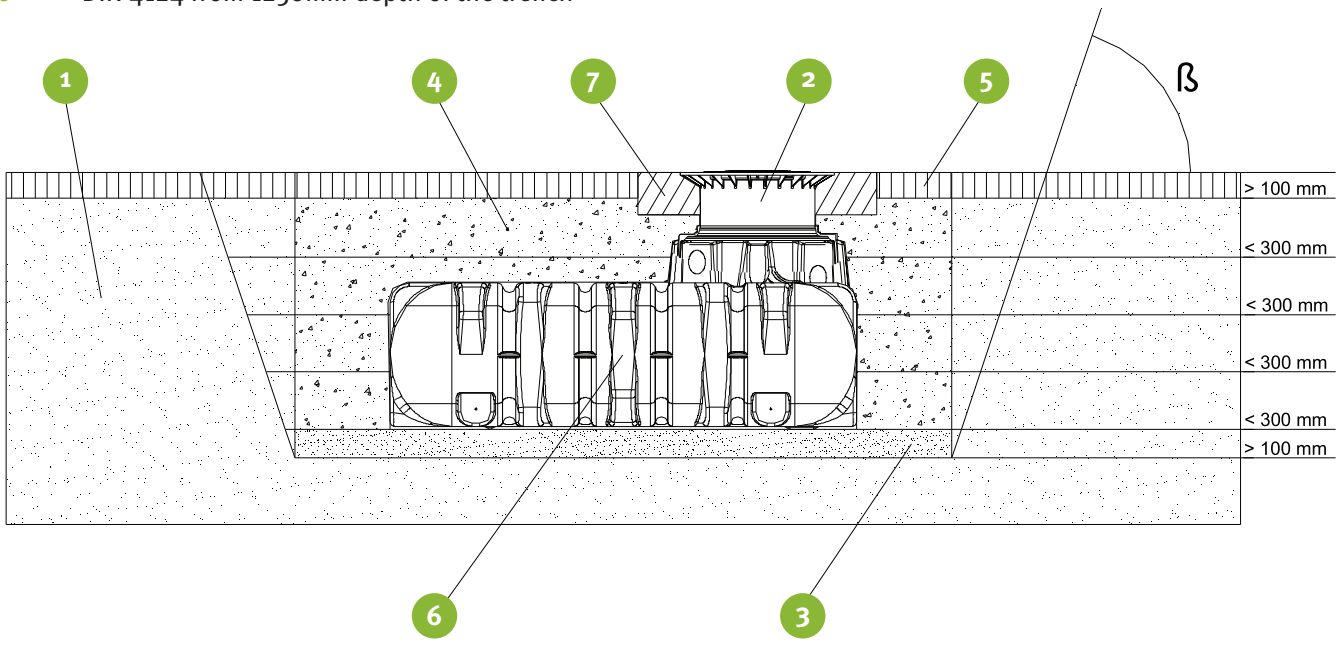

3.1 Construction site

Under all circumstances, the following points must be clarified prior to installation:

- The structural suitability of the ground according to DIN 18196
- Maximum groundwater levels which occur and drainage capability of the subsoil
- Types of load which occur, e.g. traffic loads
- Please note: HGV can only be driven over if a self-supporting, steel-reinforced concrete plate is installed!

An expert ground report should be requested from the local planning authority to determine the physical characteristics of the subsoil.

3.2 Trench

To ensure that sufficient space is available for working, the base area of the trench must exceed the dimensions of the tank by › 100 mm on each side; the distance from solid constructions must be at least 1000 mm.

If the depth of the trench is› 1250 mm an embankment must be designed according to DIN 4124. The construction site must be horizontal and plane and must guarantee sufficient load-bearing capacity.

The depth of the trench must be dimensioned so that the max. earth coverage (see point 2 - installation conditions) above the tank is not exceeded. To use the system throughout the entire year, it is necessary to install the tank and those parts of the system which conduct water in the frost-free area. The frost-free depth is usually approx. 600 mm - 800 mm; precise information in this regard can be obtained from the responsible authority.

A layer of compacted, round-grain gravel (grain size 8/16, thickness approx. 100 - 150 mm) is applied as the foundation.

3 INSTALLATION & ASSEMBLY

3.3.1 Standard installation overview

Coverage heights with telescopic dome shaft in green areas.

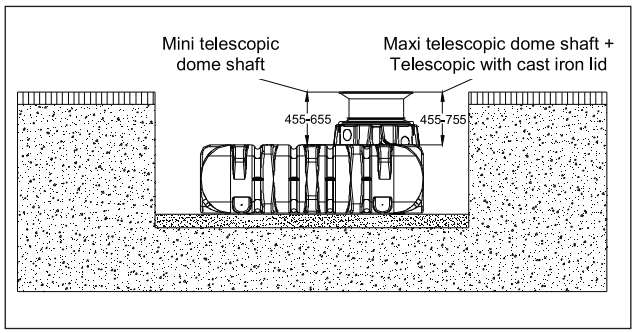

3.3.2 Maximum cover permitted over tank

Maximum coverage heights with extension and telescopic dome shaft.

(in green areas only- not under passable areas)

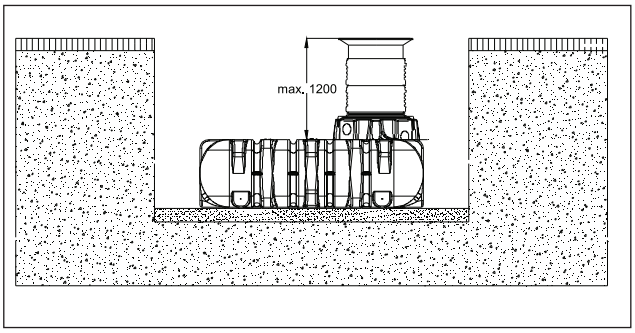

3.3.3 Slope, embankment, etc.

On installation of the tank in the immediate vicinity (‹ 5 m) of a slope, earthen mound or slope, a statically calculated supporting wall must be erected to absorb the soil pressure. The wall must exceed the dimensions of the tank by at least 500 mm in all directions, and must be located at least 1000 mm away from the tank.
Attention: When positioning the upper half shell, it must be ensured, under all circumstances, that the seal does not slip out of the groove.

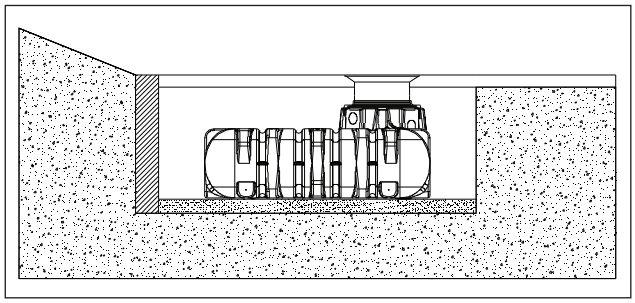

3.3.4 Groundwater and cohesive (water-impermeable) soils (e.g. clay soil)

If it is anticipated that the tanks will be immersed deeper into the groundwater than is shown in the adjacent figure, sufficient dissipation must be ensured. (See table for max. immersion depth).
Dissipation of the drainage water (e.g. via an annular drainage system) is recommended in the case of cohesive, water-impermeable soils.

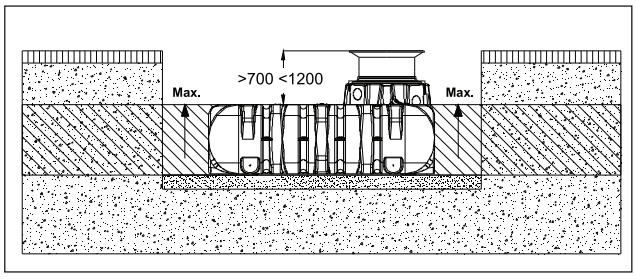

Tank	1500 litres	3000 litres	5000 litres	7500 litres
Immersion depth	700 mm	735 mm	1000 mm	1250 mm

3 INSTALLATION & ASSEMBLY

3.3.5 Installation below light duty vehicle surfaces

Cover heights with cast iron telescopic dome shaft {class B) in area driven over by vehicles up to 3.5 tonnes.

(without groundwater and stratum water)

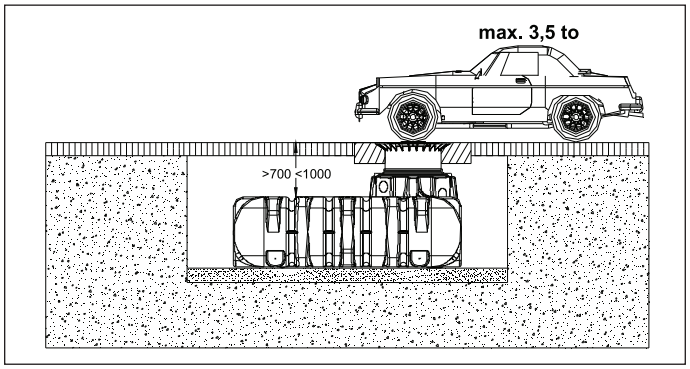

3.3.6 Installation below HGV-bearing surfaces

The shaft can only be driven over with HGV in conjunction with a self-supporting, iron-reinforced concrete plate. To ensure that no additional forces or effects of HGV-bearing are transferred to the tanks, the dimensions and strength of the concrete plate must be statically calculated.

If you have any questions in this regard, please contact your GRAF-Team.

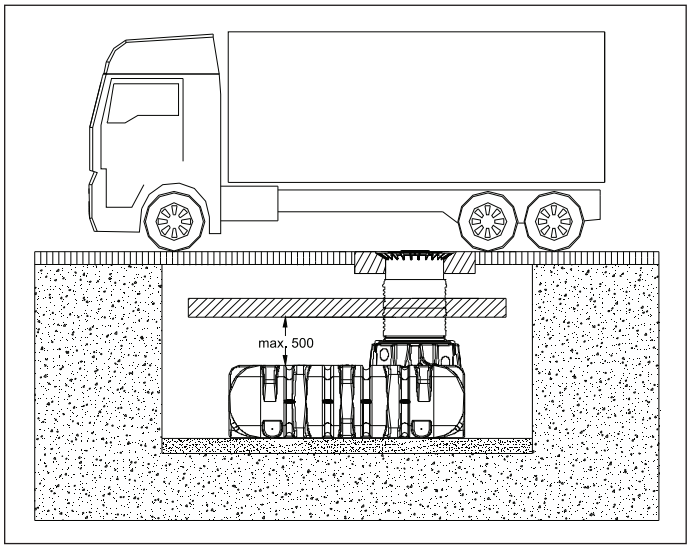

3.3.7 Installation adjacent to surfaces used by vehicles

If the underground tanks are installed adjacent to surfaces which are used by heavy vehicles weighing over 3,5 t, the minimum distance away from these surfaces is at least the depth of the trench.

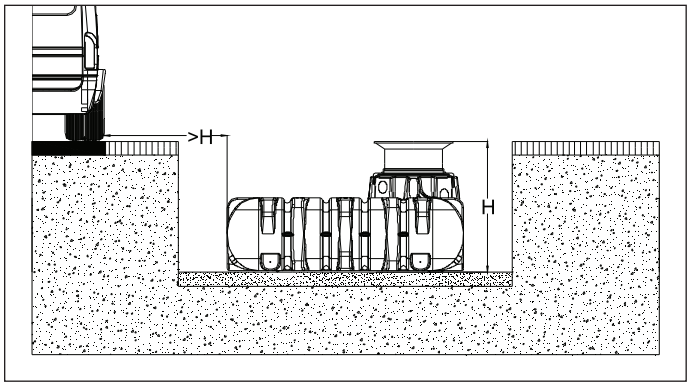

3.3.8 Connection of several tanks

Two or more tanks are connected via the assembly surfaces by means of GRAF special seals and basic pipes (to be provided at construction site).

The apertures must be drilled to the corresponding size using only the GRAF special crown bit. It must be ensured that the distance between the tanks is at least 500 mm. The pipes must pmiect at least 200 mm into the tanks.

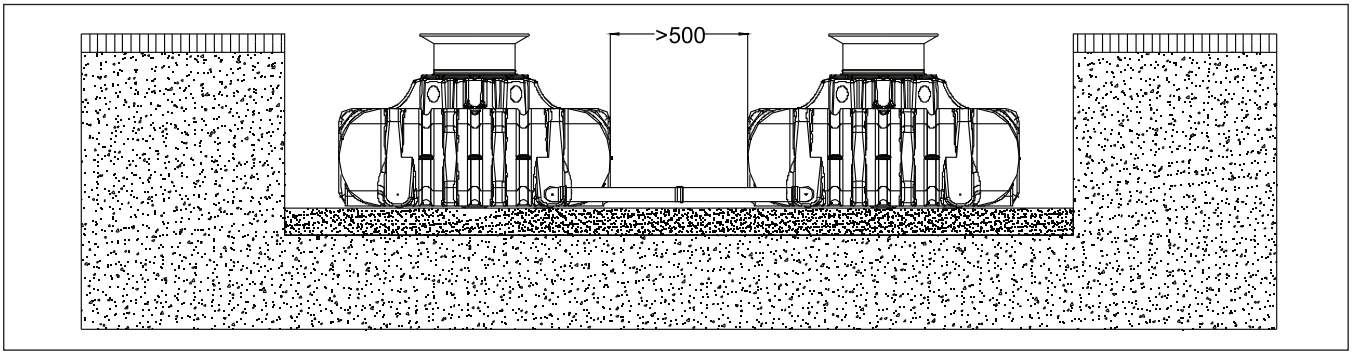

3.4 Insertion and filling

The tanks must be inserted, impact-free, into the prepared trench using suitable equipment. To avoid deformities, the tank is filled 1/3 with water before filling in the tank surrounding.

Afterwards the surrounding (roundgrain gravel, max. grain size 8/ 16) is then filled in layers of max. 30 cm steps and is compacted.

The individual layers as well as the medial support column must be well- '·· compacted (manuel tamper). Damage to the tank must be avoided during compaction. Mechanical compaction machines must not be used under any circumstances. The surrounding towards the trench must be at least 100 mm wide.

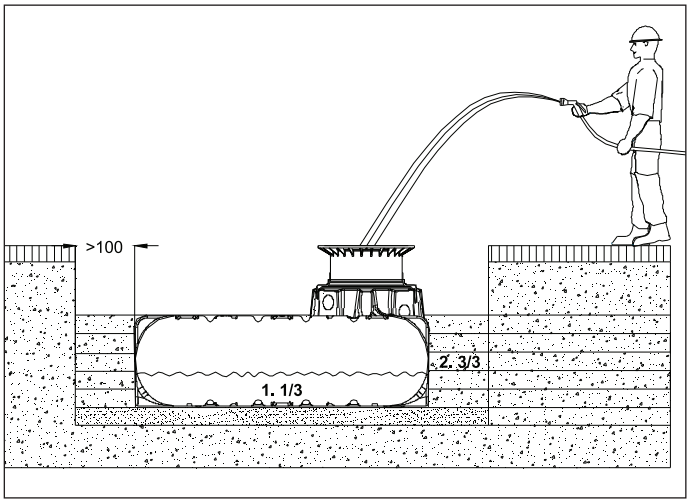

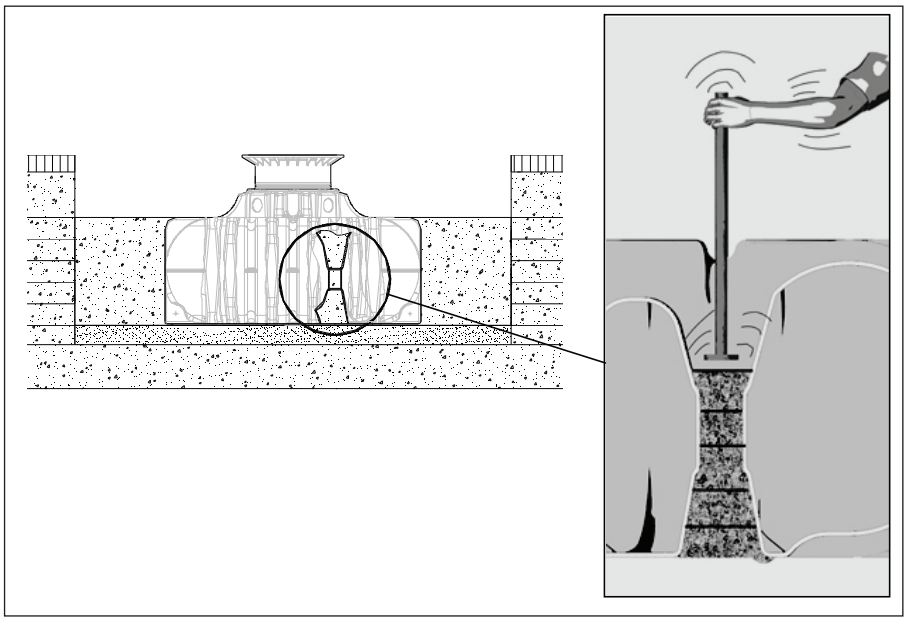

3.5 Routing connections

All feed and overflow pipes must be routed with a decline of at least 1 % in the direction of flow (possible, subsequent settling must be taken into consideration in this case). If the tank overflow is connected to a public sewer, this must be protected against reflux by means of a lifting station (mixed sewer) or reflux seal (pure rainwater sewer) according to DIN 1986.

All suction, pressure and control lines must be routed in an empty pipe, which must be routed as straight as possible, without bending, to the tank with a decline. Necessary bends must be formed using 30° moulded sections.

Important: The empty pipe must be connected to an aperture **above** the max. water level.

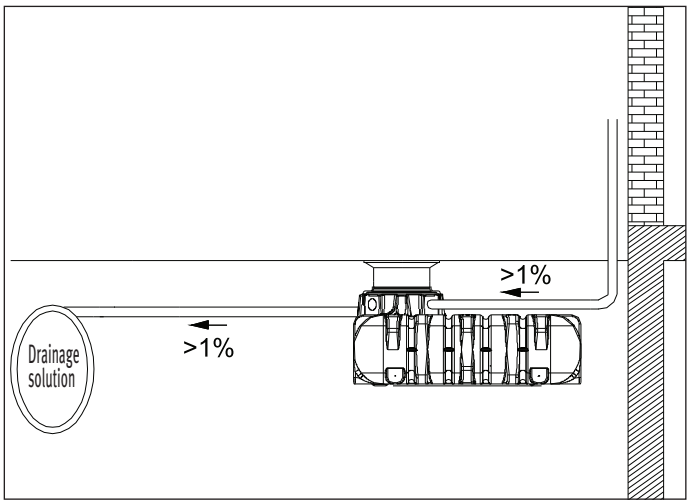

4 ASSEMBLING THE TELESCOPIC DOME SHAFT

4.1 Assembling the telescopic dome shaft

The telescopic dome shaft enables infinite adaptation of the tank to given site surfaces with earth coverage of between 455 mm and 655 mm (Mini telescopic dome shaft) or 455 mm and 755 mm (Maxi telescopic dome shaft).

For assembly purposes, the enclosed profile seal (material EPDM) is inserted into the tank dome's sealing groove and is coated generously with soft soap (do not use mineral oil-based lubricants, as these attack the seal). The telescope is then greased, inserted and aligned with the surface of the site.

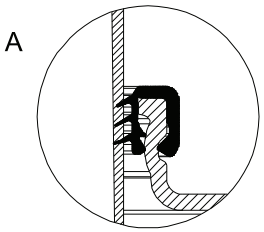

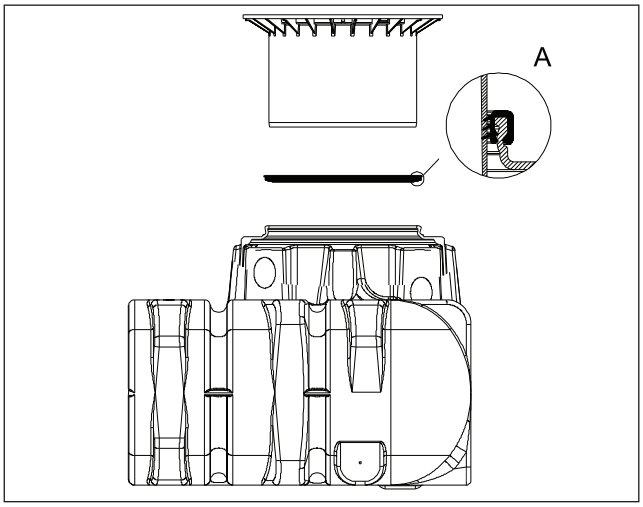

4.2 Telescopic dome shaft on which persons may walk

Important: To prevent loads from being transferred onto the tank, round-grain gravel 2 (max. grain size 8/ 16) is filled in in layers around the telescope 1 and is evenly compacted. Damage to the tank dome 3 and telescope must be avoided during this step. The cover is then positioned and is sealed to prevent entry by children.
Tighten the threaded connection on the cover so tightly that it cannot be opened by a child!

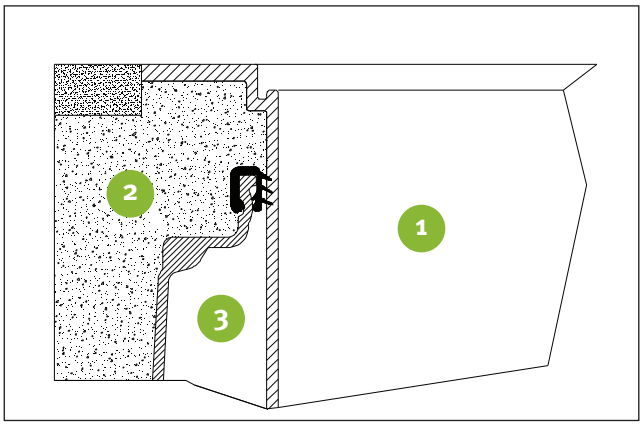

4.3 Telescopic dome shaft over which passenger cars may drive

If the tank is installed under areas used by passenger cars, the collar area of the telescope 1 (colour anthracite) must be supported with concrete 4 (load class B25 = 250 kg/ m²). The layer of concrete to be installed must be at least 300 mm wide and approx. 200 mm high all around. The permitted coverage above the shoulder of the tank is min. **700 mm** and max. **1000 mm**. There are different possibilities for lengthening the tank dome (315 mm): telescopic dome shaft with cast iron lid or Begu (max. effective length 440 mm) as well as the dapter (max. effective length 300 mm).
Attention: Use the cast cover under all circumstances.

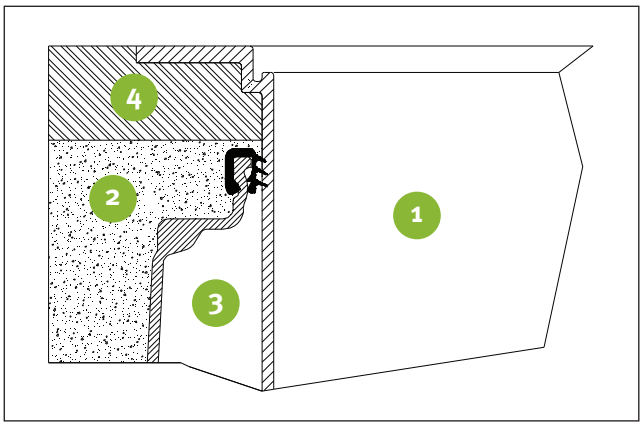

4.4 Telescopic dome shaft for HGV loading

When installing below surfaces driven on by HGVs, the telescope is lined 1 as described in 7.3. The concrete rings 6 (diameter 600 mm) and a cast frame 5 with star-shaped load distribution are then installed to support the cast cover. The cast frame must have a contact area of approx. 1 m². To extend the shaft, the telescopic dome shaft for HGV loading with class D cover, provided by the customer (max. useful length 440 mm), and the spacer (max. useful length 300 mm) can be used.
Please note: Can only be driven over with HGV, if a self-supporting, steel-reinforced concrete plate is installed.

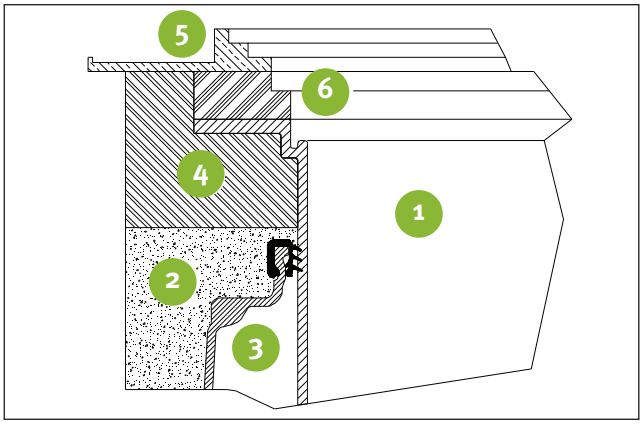

4 ASSEMBLING OF THE TELESCOPIC DOME SHAFT

4.5 Assembling the extension

For larger coverage heights an extension is needed. To insert the extension into the tank dome, soft soap is needed. Into the highest groove of the extension the profile seal is inserted an greased generously. Afterwards push the telescopic dome shaft into the extension and adapt it to the planned area surface.

1 Extension = max. earth-cover 955 mm respectively 1055 mm (in connection with Mini respectively Maxi telescopic dome shaft)

1. Telescopic dome shaft (can be inclined by 5°)
2. Extension
3. Profile seal
4. Tank dome Platin

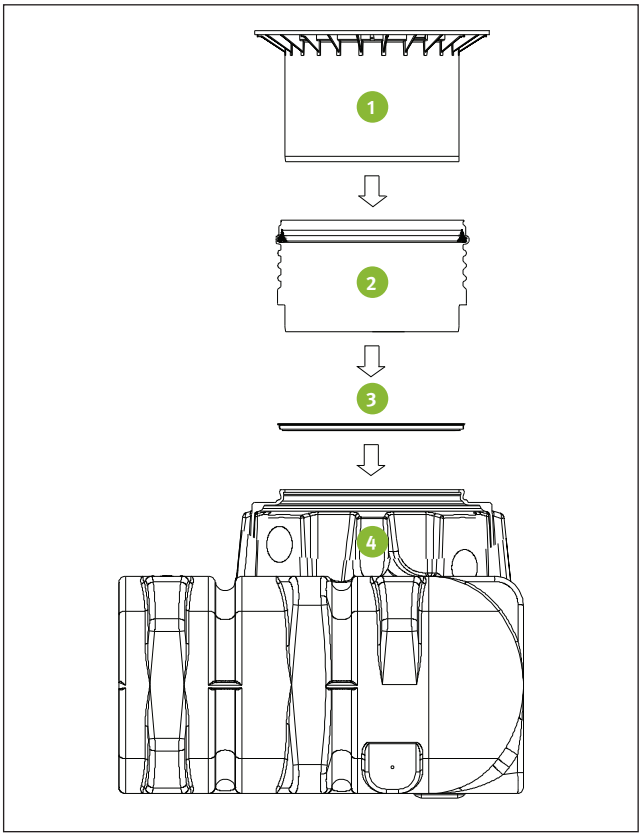

5

5.1 Scope of supply

1. Underground tank (choice of tanks available, sizes vary according to property type)
2. Telescopic lid (choice of telescopic lid available, depending on tank location)
3. Filter (Basket filter supplied in accordance with type of tank)
4. Submersible pump with floating water intake
5. Internal hose connection box
6. External hose connection box

5.2 Supplied by others

7. 100mm diameter duct pipe to contain; power cable for pump
8. 100mm diameter drainage pipe connected from downpipes to the inlet at the top of the tank (all downpipes brought into one pipe for connection to the filter)
9. 100mm diameter pipe for overflow from the tank to mains drainage network or soakaway

5.3 Rainwater storage tank Carat / external hose connection box

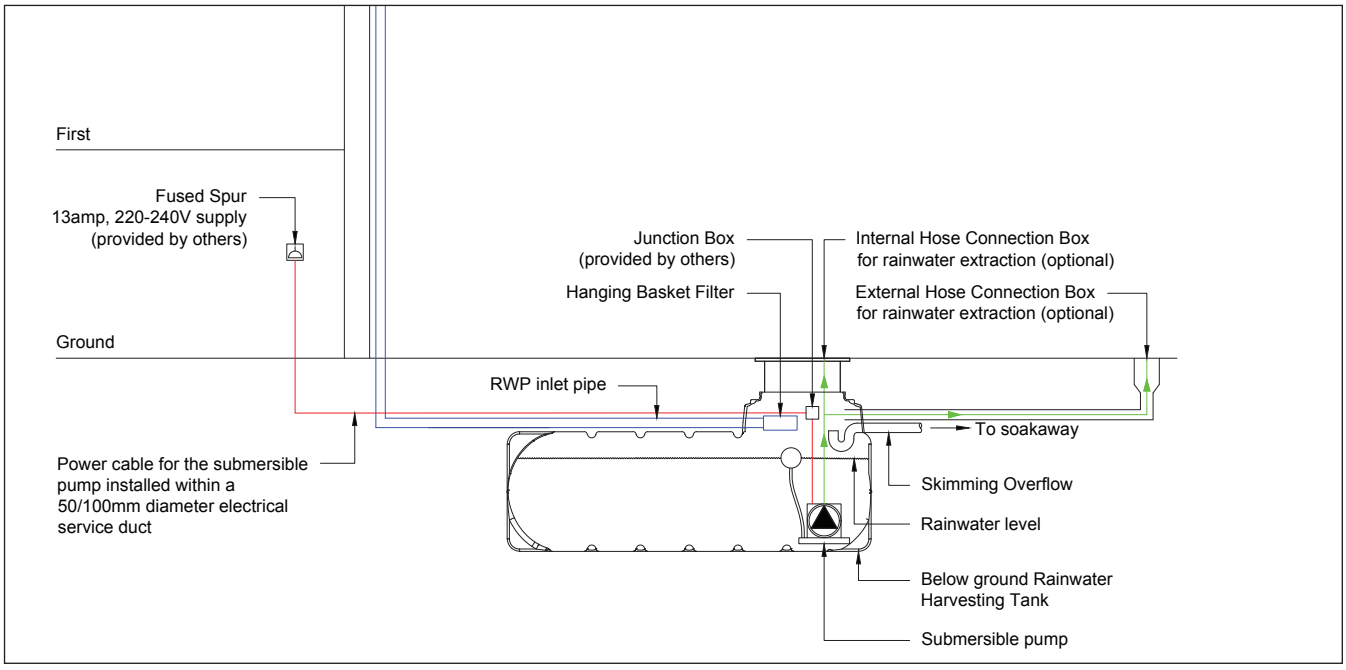

6 GARDEN SUBMERGE SET - INSTALLATION OF TECHNICAL PARTS

6.1 Scope of supply main components

Submerged and suction pump

Floating water extraction unit

Water plug socket - Version Extern / Version Intern

25m roll of HDPE pipe, 25mm diameter, black/green, labelled as Rainwater

6.2 Rainwater storage tank Platin / set up of internal and external hose connection box

Caution: The distance between the external hose connection box and the underground tank is limited by the pressure hose – length of the pressure hose is 25 m. This is the standard length in the supply, more hose can be supplied on request.

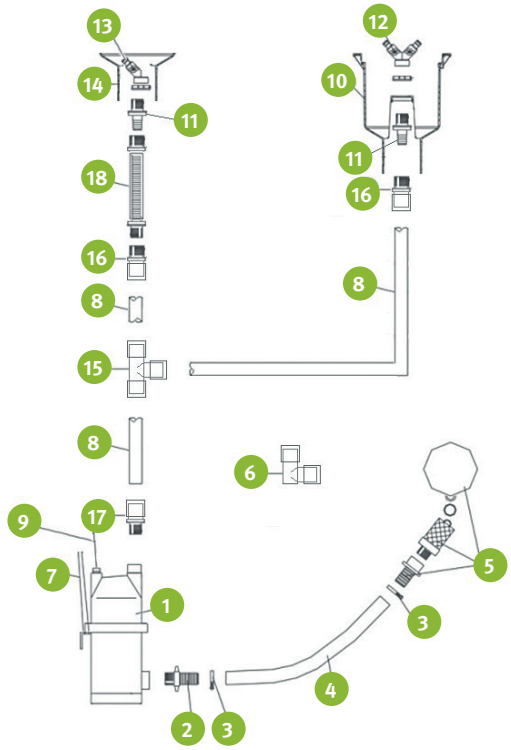

1. Submersible pump
2. Brass hose screwing
3. Hose clip
4. Suction hose
5. Floating suction set
6. 25mm compression elbow (optional fitting used for external tap connection
7. Fixing set for submersible pump
8. Pressure hose, black & green colour, length 25 m
9. Electricity supply, length 10 m, 3-core cable
10. Water plug socket external
11. 3/4” tank connector
12. 2-way regulating plug
13. Hose-lock connector
14. Internal hose connection box, located on manhole cover of rainwater tank
15. 25mm compression T-fitting
16. 25mm compression x 3/4” female threaded fitting
17. 25mm compression x 1” male threaded fitting
18. 1m length of braided hose, 3/4” male x 3/4” female connections

6 GARDEN SUBMERGE SET - INSTALLATION OF TECHNICAL PARTS

6.3 Installation of internal hose connection box

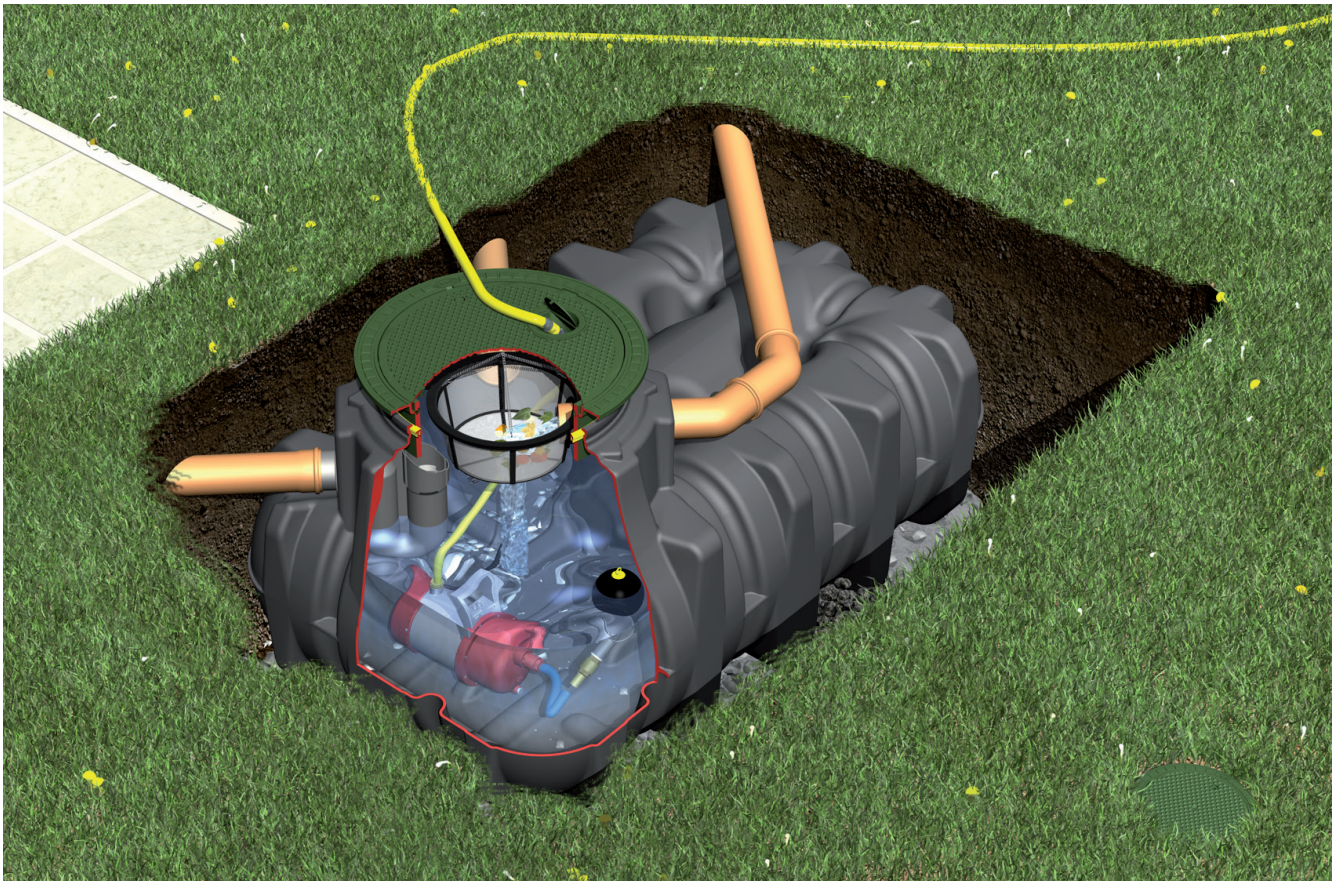

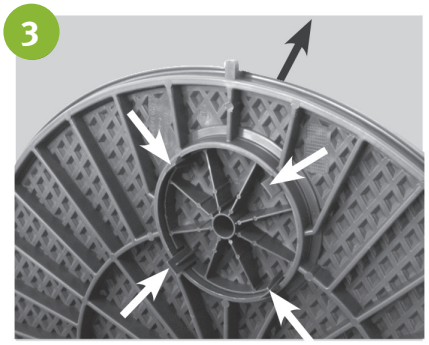

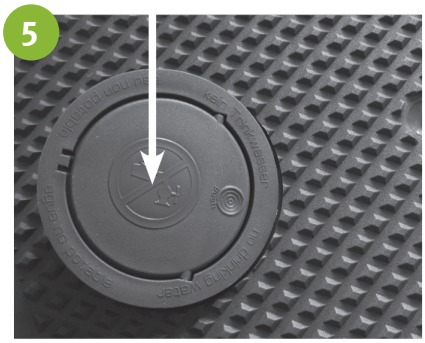

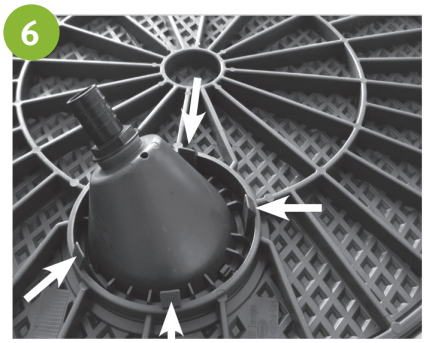

6 GARDEN SUBMERGE SET - INSTALLATION OF TECHNICAL PARTS

6.3 Installation of internal hose connection box (continued)

7

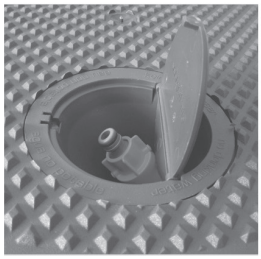

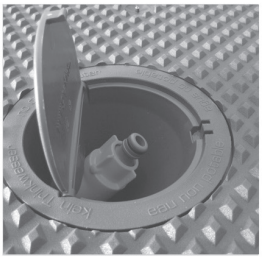

8

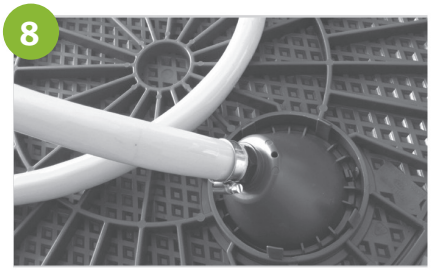

9

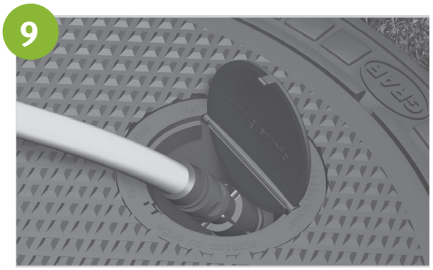

10

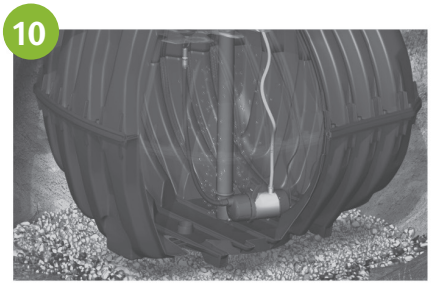

11

375118 375119

7 TECHNICAL DATA - UNIVERSAL INTERNAL FITTED FILTER STRAINER

7.1 Universal internal fitted filter strainer

- The filter is suited to installation in a pilot shaft or cistern.
- The difference in height between inlet and outlet is around 100 mm.
- The filter must not be installed in the ground itself.
- The filter is suited to roof surfaces of up to around 200 m².

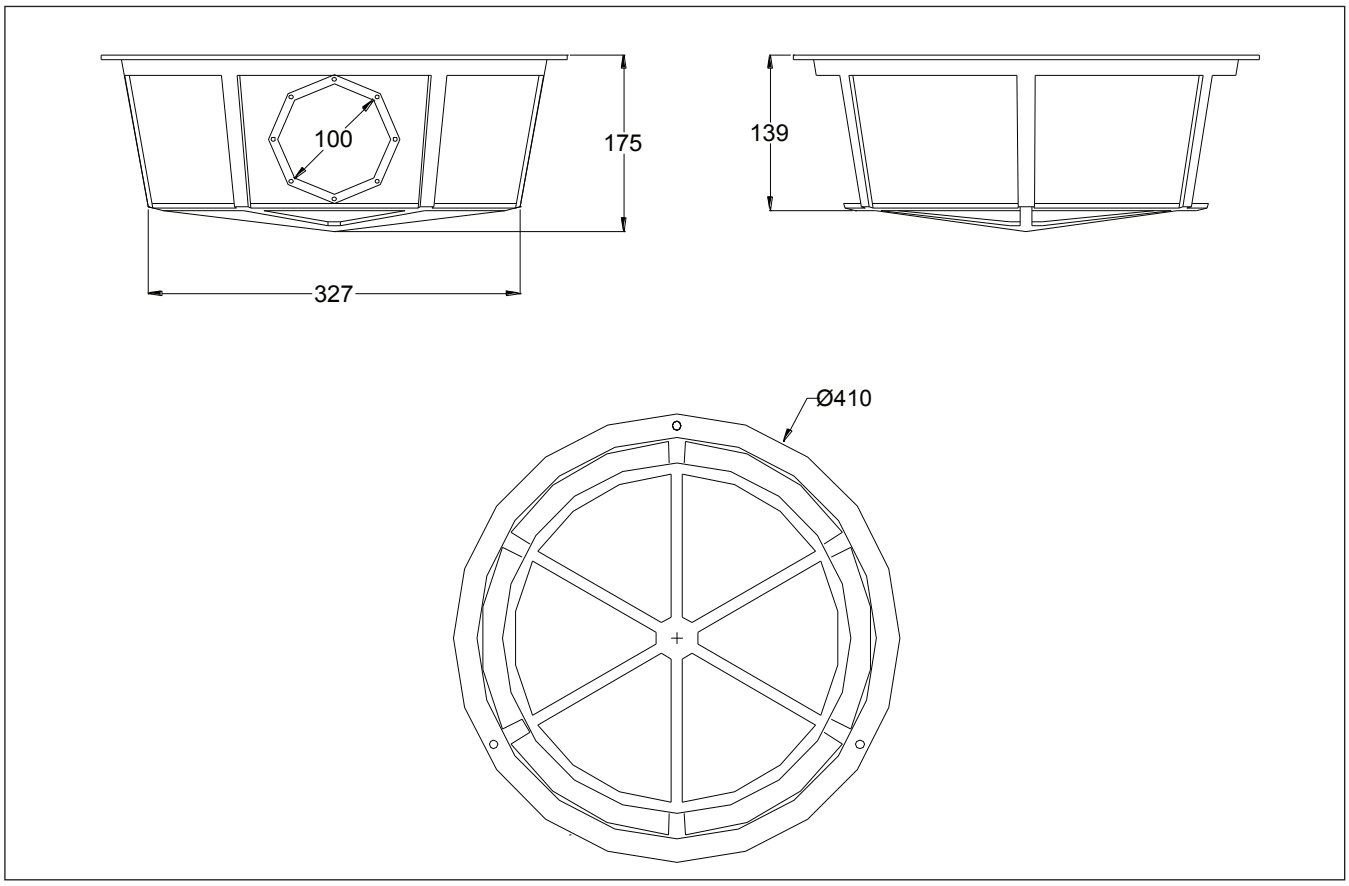

7.2 Filter preparation

Before being installed in the tank, the enclosed chain suspension 2 must be secured to the filter strainer using the three S-shaped hooks supplied 1 and shortened to the assembly length required.

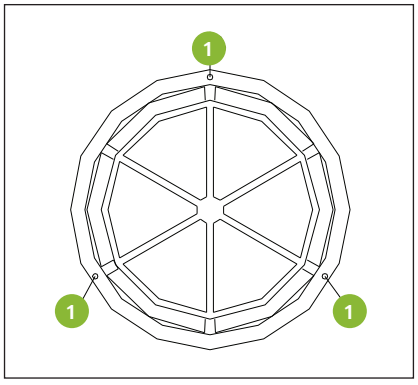

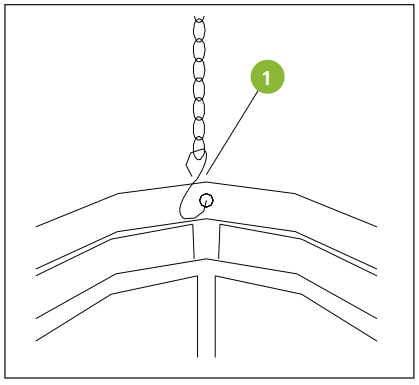

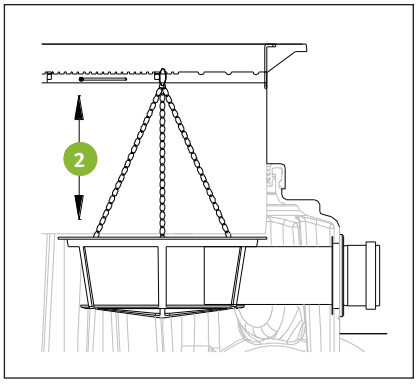

7 TECHNICAL DATA - UNIVERSAL INTERNAL FITTED FILTER STRAINER (CONTINUED)

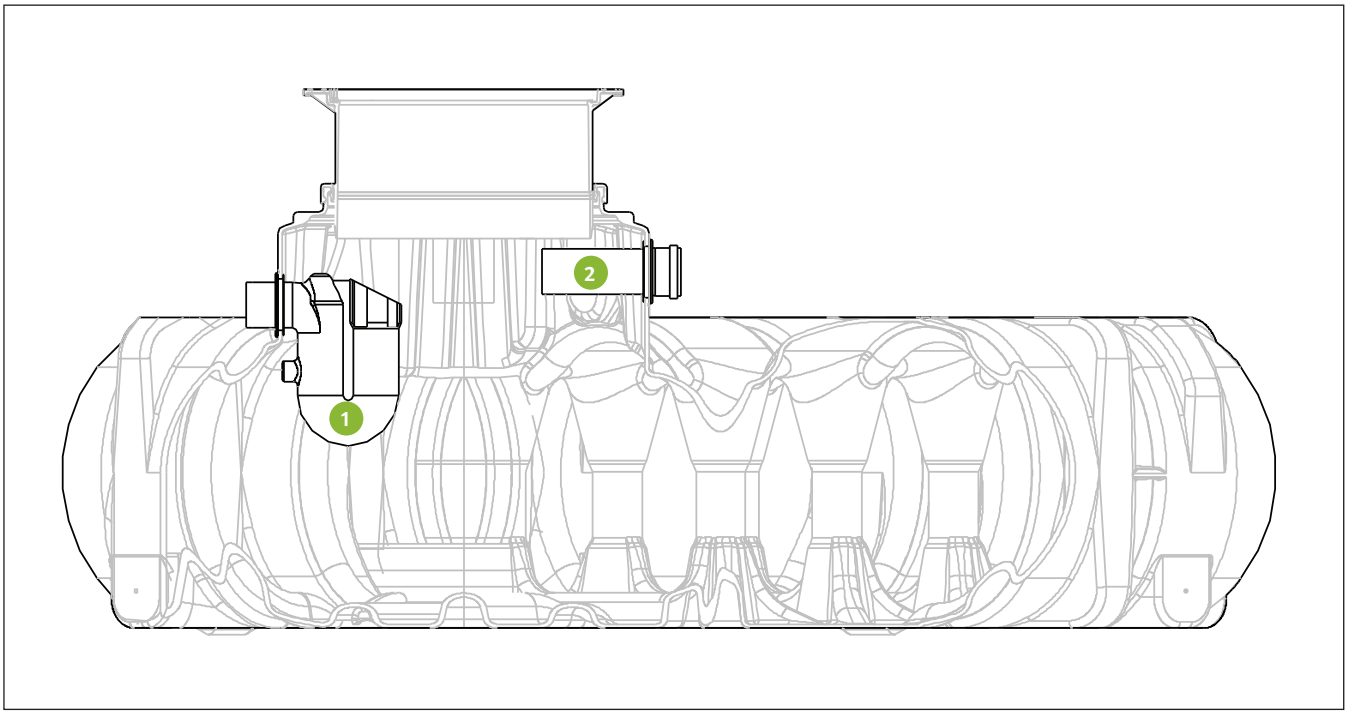

7.3 Preparation on the tank

The overflow siphon 1 is inserted (passing from the inside out) in the bottommost tank dome seal. The DN 100 supply pipe 2 (provided by the customer) is fitted to one of the top holes, this involves guiding in the pipe (working from the outside in) which must protrude at least around 100mm into the filter strainer.

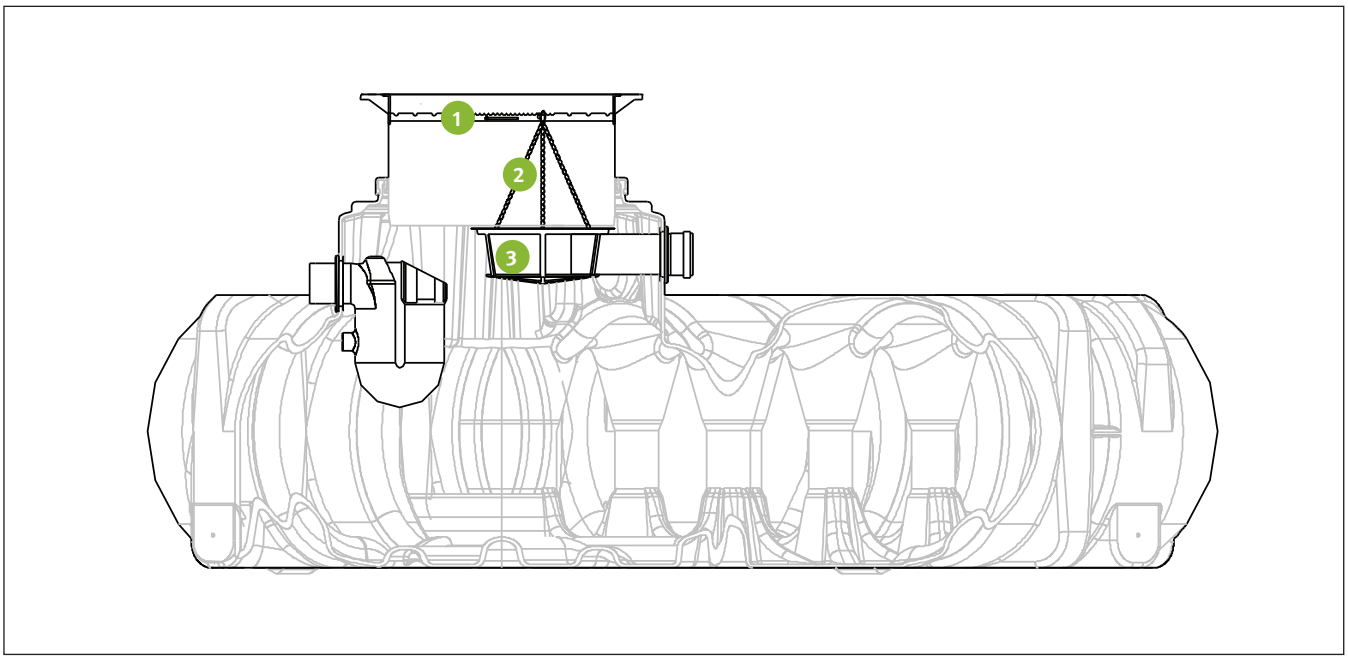

7.4 Installing the filter

The stainless steel cross bar supplied 1 is set to the diameter of the telescopic dome shaft (min. 570 mm / max. 690 mm) and then attached to the shaft's collar. The prepared filter 3 is then guided through the tank dome from above, slid onto the supply pipe, which is protruding at least 100 mm, and fitted in the cross bar using the previously adjusted chain suspension 2.

8 COMMISSIONING & SERVICE

Before commissioning and at every inspection, the lifting out mechanism must be positioned at 90° to the inlet so that no large objects such as leaves and twigs can catch on the handle. The straining filter is re-moved for cleaning and the basket must be thoroughly cleaned with water until all the pores are open. It is advised to clean every 4 to 5 weeks (more often in autumn due to more leaves and twigs) or according to requirements.

The filter strainer basket must be lightly pressed into place taking care that the seal sits precisely after every cleaning.

At the occasion of each inspection, the overflow siphon must be checked and flushed in necessary.

9 INSTALLATION AND MAINTENANCE INSTRUCTIONS FOR THE GRAF RAINWATER HARVESTING SYSTEM

The system must be checked for leaks, cleanliness and stability at least every year.

The entire system should be serviced at intervals of approx. 5 years. In this case, all parts of the system must be cleaned and their function checked. Servicing should be carried out as follows:

- Drain the tank completely
- Clean surfaces and internal parts with water
- Remove all dirt from the tank
- Check that all internal parts are firmly seated.

The points described in these instructions must be observed under all circumstances. All warranty rights are invalidated in the event of non-observance. Separate installation instructions are enclosed in the transportation packaging for all additional articles purchased from GRAF.

The components must be checked for any damage prior to installation under all circumstances.

Missing instructions can be downloaded on www.graf.info or can be requested from GRAF.

15 NOTES

15 NOTES

RAINWATER HARVESTING

WASTEWATER MANAGEMENT

STORMWATER MANAGEMENT

WATER BUTTS & COMPOSTERS

MULTIPURPOSE CONTAINERS

Graf UK Ltd
Regen House
Beaumont Road
Banbury
Oxfordshire OX16 1RH

T: 01608 661500
F: 01295 211333
E: info@grafuk.co.uk
www.grafuk.co.uk

Graf UK Ltd (Scotland)
220 Blairtummock Road
Queenslie Industrial Estate
Glasgow
G33 4ED

T: 0141 465 1540
F: 01295 211333
E: info@grafuk.co.uk
www.grafuk.co.uk